INTERSTATE TRAILERS, INC. 1101 HERITAGE PARKWAY MANSFIELD, TEXAS 76063
Visit our Web site at **www.interstatetrailers.com**

**817/453-5402**
**800/433-5384**
**FAX 817/453-5445**

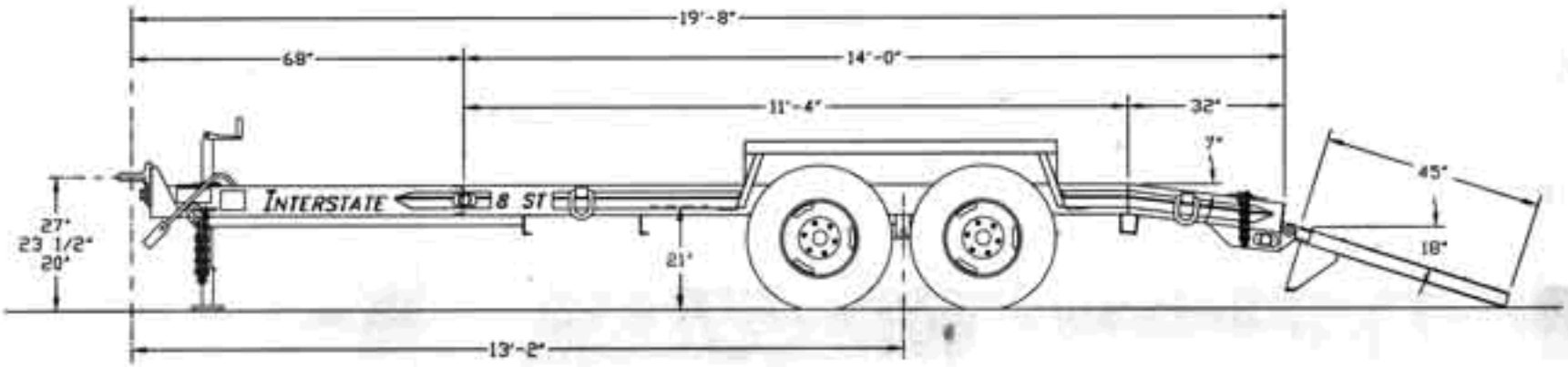


# MODEL 8ST

| | | | |
|---|---|---|---|
| CAPACITY: | 8,000# @ 55 MPH | Hitch: | Adjustable Pintle Eye |
| Trailer Weight: | 2730# | Heavy Duty Axles: | (2) 6,000# |
| Overall Length: | 19' - 8" | Heavy Duty Brakes: | Electric 12" x 2" - Each Wheel |
| Overall Width: | 98"/102" | Heavy Duty Suspension: | Spring Type |
| Platform Length: | 14' - 0" | Tires: | (4) 7.00 x 15 - 8 Ply |
| Platform Width: | 74"/77½" | Wheels: | (4) 6 x 15 6 Bolt Disc |
| Platform Height: | 21" | Lights & Electric: | Sealed Beam System/ ICC & DOT Approved |
| Jack: | 5,000# Screw Type | Ramps: | Length: 45" Width: 21" |
| Decking: | 2" Nominal Hardwood | | |

Gell Cell Break-A-Way Switch System with Battery

Your INTERSTATE Dealer Is

Interstate Trailers, Inc. reserves the right to change design, material and/or specifications without notice and without incurring any obligation to such changes.